DO NOT SCALE - IF IN DOUBT, ASK

NOTES

1. GENERAL
1.1 ALL DIMENSIONS TO BE VERIFIED ON SITE PRIOR TO THE COMMENCEMENT OF ANY WORKS. ANY DISCREPENCIES TO BE REPORTED TO THE ENGINEER. DRAWINGS NOT TO BE SCALED. FIGURED DIMENSIONS ONLY TO BE ADOPTED.

2. MATERIALS
2.1 PRECAST CONCRETE (45MPa):

3 REINFORCEMENT
3.1 MILD STEEL BARS (R): 250MPa
3.2 HIGH YIELD BARS (Y): 450MPa

4. COVER 60mm MINIMUM CONCRETE COVER TO REINFORCEMENT UNLESS OTHERWISE NOTED

5. ALL SHARP EDGES TO BE CHAMFERED 25mmX25mm UNLESS OTHERWISE NOTED

6. LIFTING
6.1 LIFTING OF PRECAST UNITS TO COMMENCE UPON CONCRETE ACHIEVING MIN 25MPa STRENGTH.
6.2 LIFTING ARRANGEMENT TO BE APPROVED BY THE ENGINEER BEFORE LIFTING.

7. INFILL PANELS TYPE 4A PARTICULARS AND No'S OFF:

TOTAL CONCRETE VOLUME	$35.6m^3$
TOTAL MASS	85.5t
PHASE NO	No OFF
PHASE 3	5
TOTAL No OFF	5

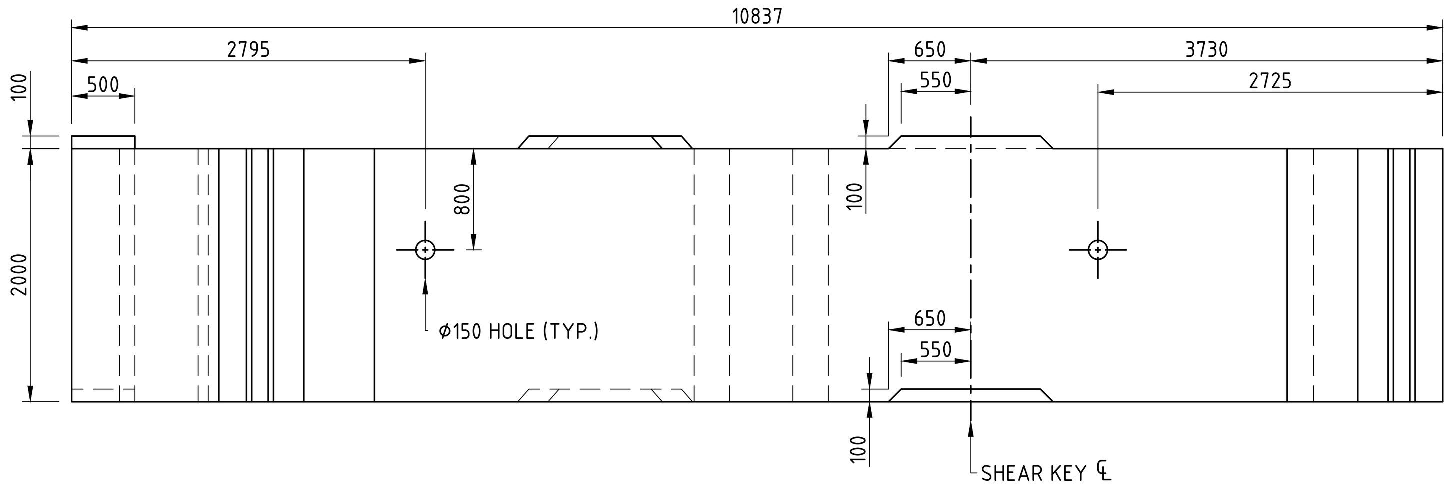

ELEVATION-WALL 1
1:50

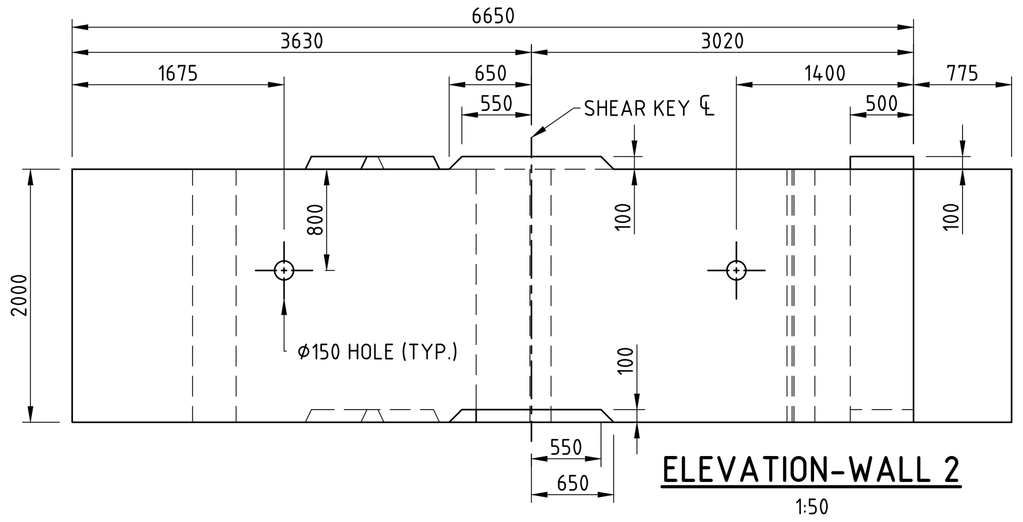

ELEVATION-WALL 2
1:50

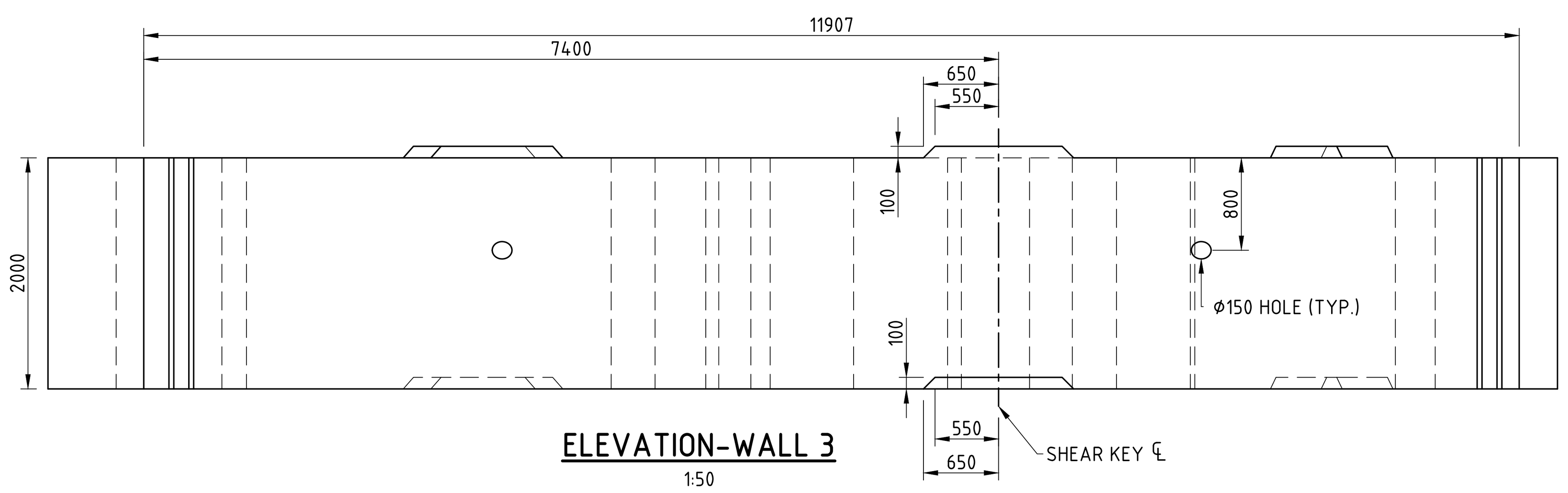

ELEVATION-WALL 3
1:50

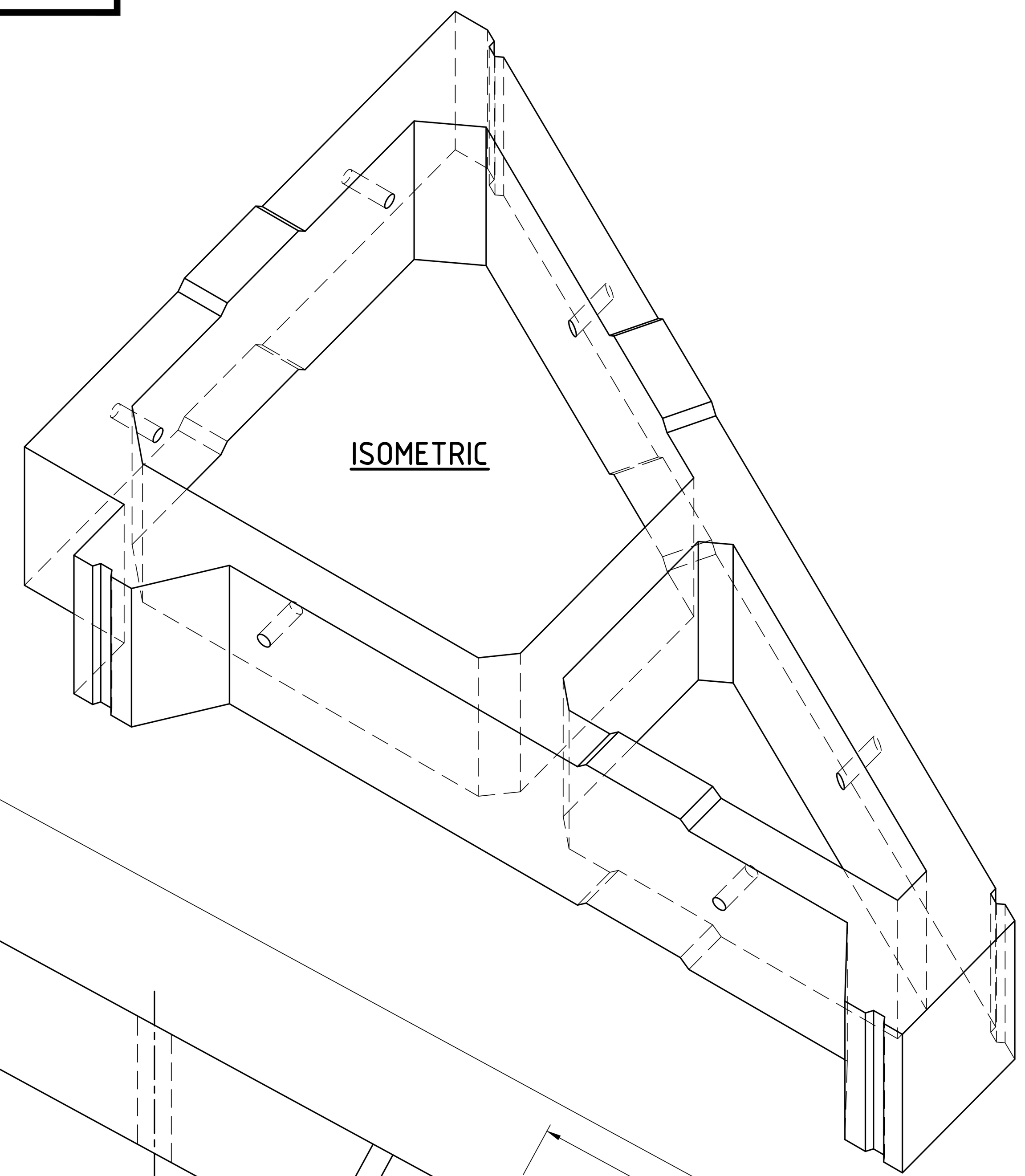

ISOMETRIC

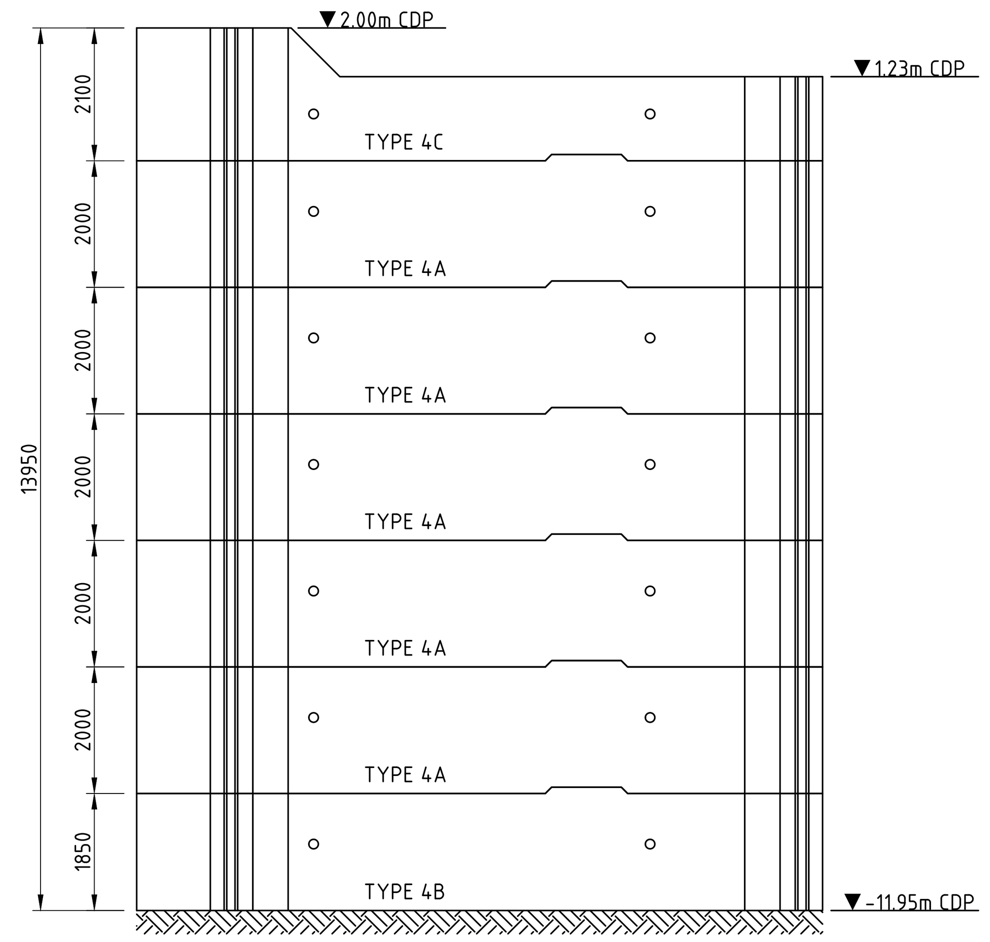

ELEVATION-UNIT TYPE 4
N.T.S

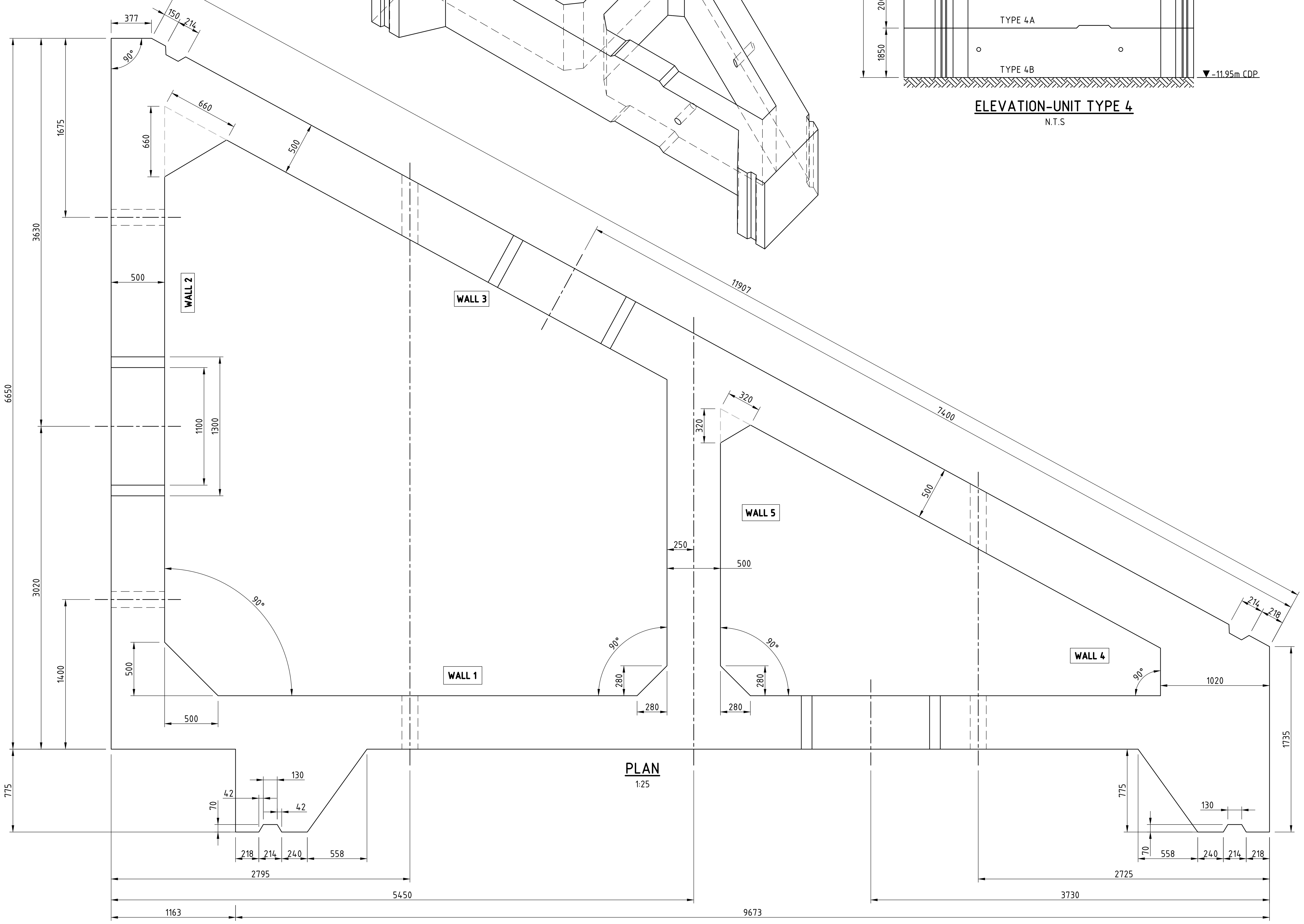

PLAN
1:25

DRAWING NO.	REFERENCE
1785-CO-060-DWG-0027-02	INFILL PANEL TYPE 4A REINFORCEMENT DETAILS
1785-CO-060-DWG-0027-01	INFILL PANEL TYPE 4A REINFORCEMENT DETAILS
1785-CO-060-DWG-0003-01	GENERAL ARRANGEMENT PHASE 3

REFERENCE DRAWINGS

Engineers
ZAA ENGINEERING PROJECTS & NAVAL ARCHITECTS
P O Box 26546
HOUT BAY 7872
Tel: +27(21) 791 9100
E-Mail: zaaepna@zaaepna.com
31 Melkhout Crescent
Hout Bay 7806
Fax: +27(21) 790 4470

PROJECT NO	DIS CODE	AREA	DISP	TYPE	DRG NO	SHEET	STATUS	REV
1785	CO	060	C	DWG	0026	01	T	0A

NO.	DESCRIPTION	BY	CHK'D	APP'D	DATE
0A	ISSUED FOR TENDER	DM	WV/MC	JZ	2019.07.26

REVISIONS / ISSUE AUTHORIZATION

This Document including all design and information therein is Confidential Intellectual Property of ZAA Engineering Projects and Naval Architecture (Pty) Ltd. Copyright and all other rights are reserved by ZAA. This Document may only be used for its intended purpose.

EPCM CONSULTANT: TNPA

TITLE	NAME	SIGNATURE	DATE
LEAD DES. ENG.			
ENG. COORD.			
ENG. MANAGER			
AREA MANAGER			
PROJECT MGR.			

DIVISION

DIV.	TITLE	NAME	SIGNATURE	DATE

ORIGINATOR: ZAA

TITLE	NAME	SIGNATURE	DATE
DRAWN	DM	DM	19 07 26
CHECKED	MC/WvW	[signature]	19 07 26
ENG. COORD.			
DISCIP. ENG.			
ENG. MANAGER			
AREA MANAGER			

PR.ENG. / PR.TECH.

NAME	J. ZIETSMAN	DATE
SIGNATURE	J. Zietsman	19 07 26
REG. NUMBER	760293	
SCALE :	AS INDICATED	A1

Transnet National Ports Authority
237 MAHATMA GANDHI ROAD
DURBAN
P.O. BOX 31683, DURBAN
TEL: 031 361 8852

TRANSNET

PORT OF DURBAN

DCT BERTHS 203 to 205 RECONSTRUCTION
DEEPENING AND LENGTHENING

CAISSON QUAY WALL
PRECAST INFILL UNIT TYPE 4A
CONCRETE DETAILS

PROJECT NUMBER	DV	FBS	DIS.	TYPE	DRG. NO.	SHT.	REV.	ID
212830	1	060	C	GA	1025	01	0A	DM